Performance curve

ISO9906 Annex A 2900rpm

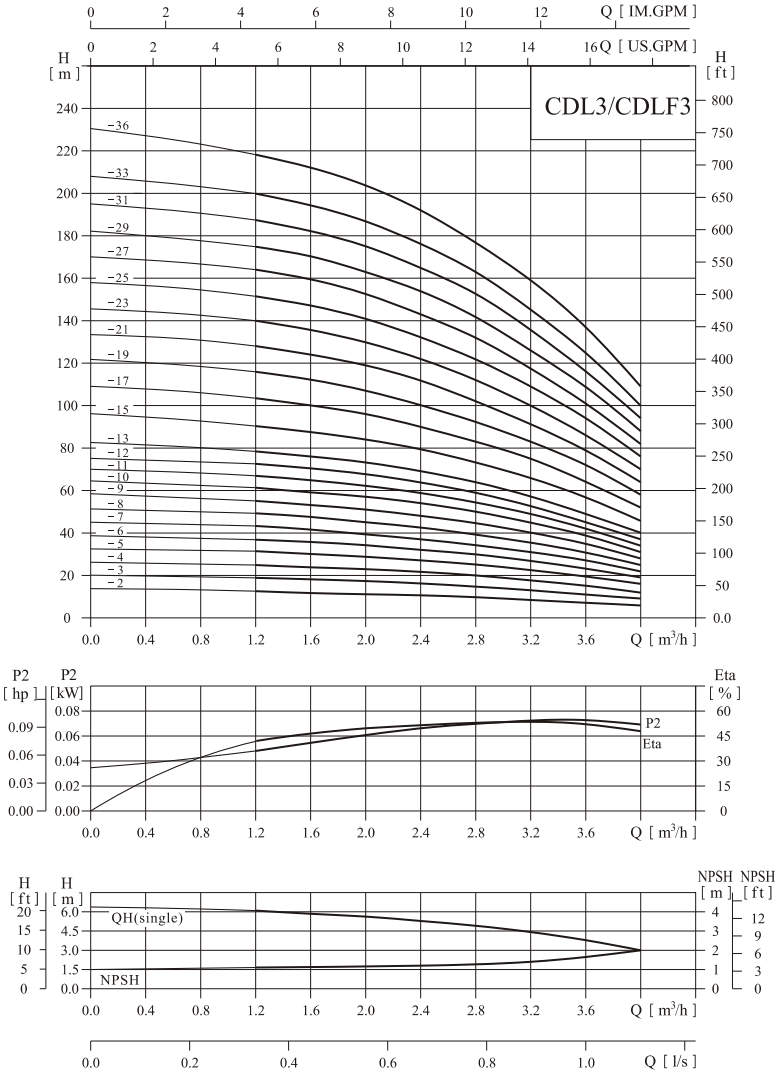

Performance table

Model	Driving motor (kW)	Driving motor (hp)	Q (m³/h)	1.2	1.6	2.0	2.4	2.8	3.0	3.2	3.6	4.0
CDL3-2	0.37	0.5	H (m)	12.5	11.5	11	10.5	10	9	8	7	6
CDL3-3	0.37	0.5		19	18.5	17.5	16.5	15	14	13	11	9
CDL3-4	0.37	0.5		25	24	23	21.5	20	19	18	15	12
CDL3-5	0.37	0.5		31	30	29	27	25	23	22	19	16
CDL3-6	0.55	0.75		36	35	34	32	30	28	27	23	19
CDL3-7	0.55	0.75		43	41	39	37	34	32	31	27	22
CDL3-8	0.75	1		49	47	45	43	39	37	35	31	25
CDL3-9	0.75	1		55	53	51	48	45	42	40	35	28
CDL3-10	0.75	1		61	59	57	54	50	47	45	39	31
CDL3-11	1.1	1.5		67	64	61	58	54	51	49	42	34
CDL3-12	1.1	1.5		73	70	67	63	58	55	52	45	37
CDL3-13	1.1	1.5		78	76	73	69	64	60	57	49	40
CDL3-15	1.1	1.5		90	88	84	79	73	69	66	57	46
CDL3-17	1.5	2		103	100	96	90	83	79	75	64	52
CDL3-19	1.5	2		115	112	107	100	92	88	83	72	58
CDL3-21	2.2	3		128	124	119	112	102	98	91	79	64
CDL3-23	2.2	3		140	135	130	122	112	107	100	86	70
CDL3-25	2.2	3		151	147	141	131	122	116	109	94	76
CDL3-27	2.2	3		164	159	152	143	132	124	117	101	82
CDL3-29	2.2	3		175	170	163	153	142	133	126	109	88
CDL3-31	3.0	4		187	182	175	165	153	142	135	116	94
CDL3-33	3.0	4		199	194	187	176	163	151	145	125	100
CDL3-36	3.0	4		218	212	204	192	178	168	159	137	109

Installation sketch

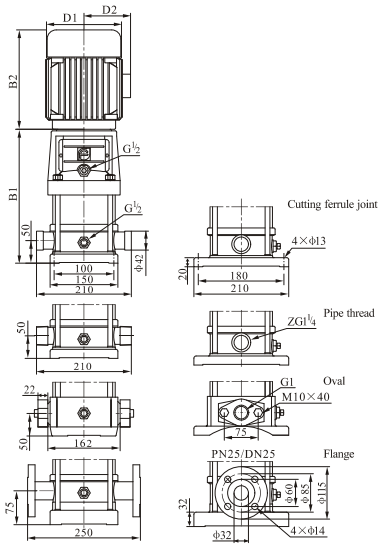

Size and weight

Model	Size (mm) B1	B2	B1+B2	D1	D2	Weight (kg)
CDL3-2	258	210	468	148	117	20
CDL3-3	276	210	486	148	117	20
CDL3-4	294	210	504	148	117	21
CDL3-5	312	210	522	148	117	21
CDL3-6	330	210	540	148	117	23
CDL3-7	348	210	558	148	117	24
CDL3-8	376	245	621	170	142	27
CDL3-9	394	245	639	170	142	28
CDL3-10	412	245	657	170	142	28
CDL3-11	430	245	675	170	142	29
CDL3-12	448	245	693	170	142	30
CDL3-13	466	245	711	170	142	31
CDL3-15	502	245	747	170	142	32
CDL3-17	548	290	838	190	155	38
CDL3-19	584	290	874	190	155	39
CDL3-21	620	290	910	190	155	42
CDL3-23	656	290	946	190	155	43
CDL3-25	692	290	982	190	155	44
CDL3-27	728	290	1018	190	155	45
CDL3-29	764	290	1054	190	155	46
CDL3-31	810	315	1125	197	165	54
CDL3-33	846	315	1161	197	165	55
CDL3-36	900	315	1215	197	165	57

CDL3-25 ~ 3-36 sub-connection of pipeline has no oval flange connection.
The overall dimensions of the single-phase motor and explosion-proof motor are a little different. Pls contact us for details.